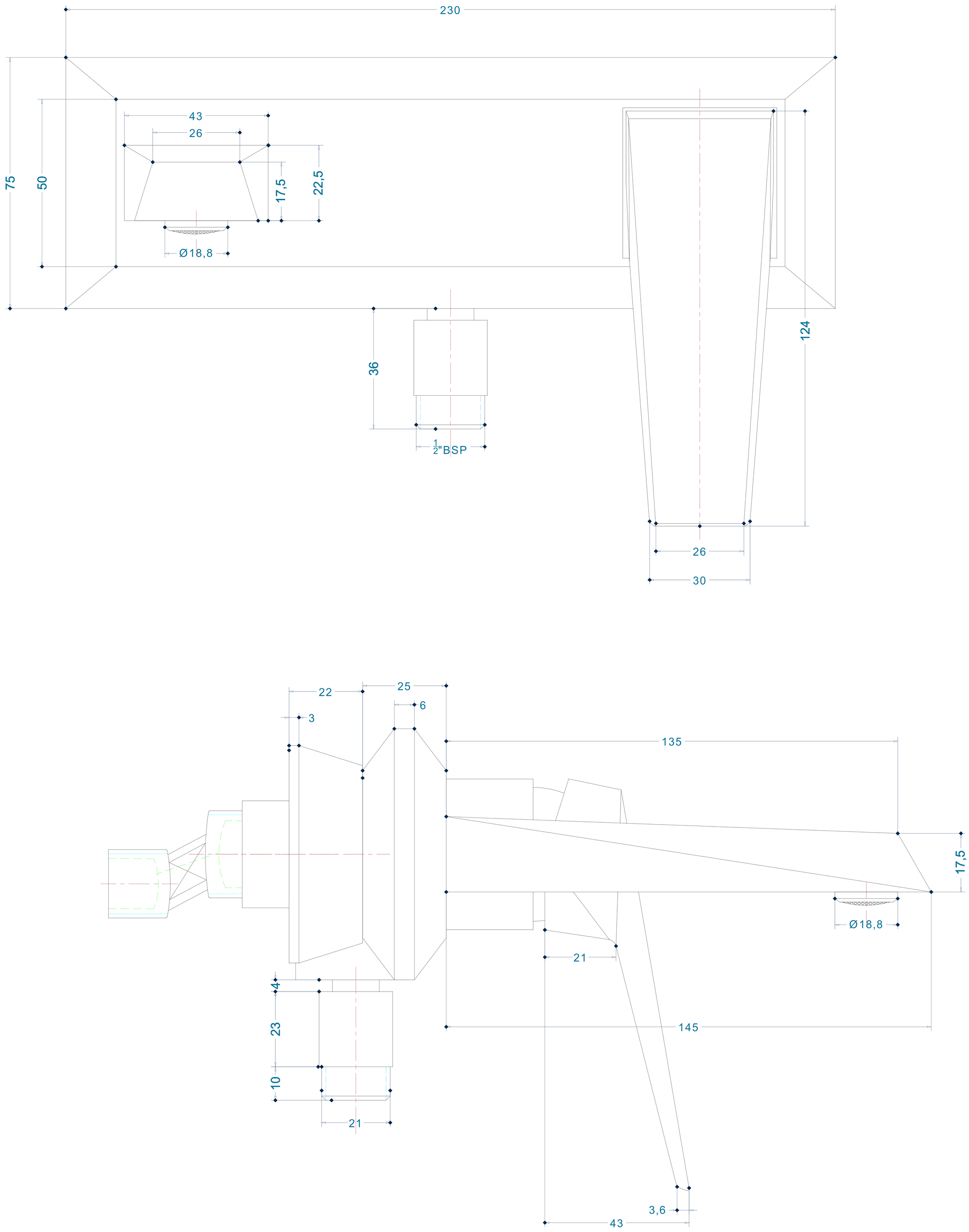

OROS-F350009

S/L BATH & SHOWER MIXER EXPOSE