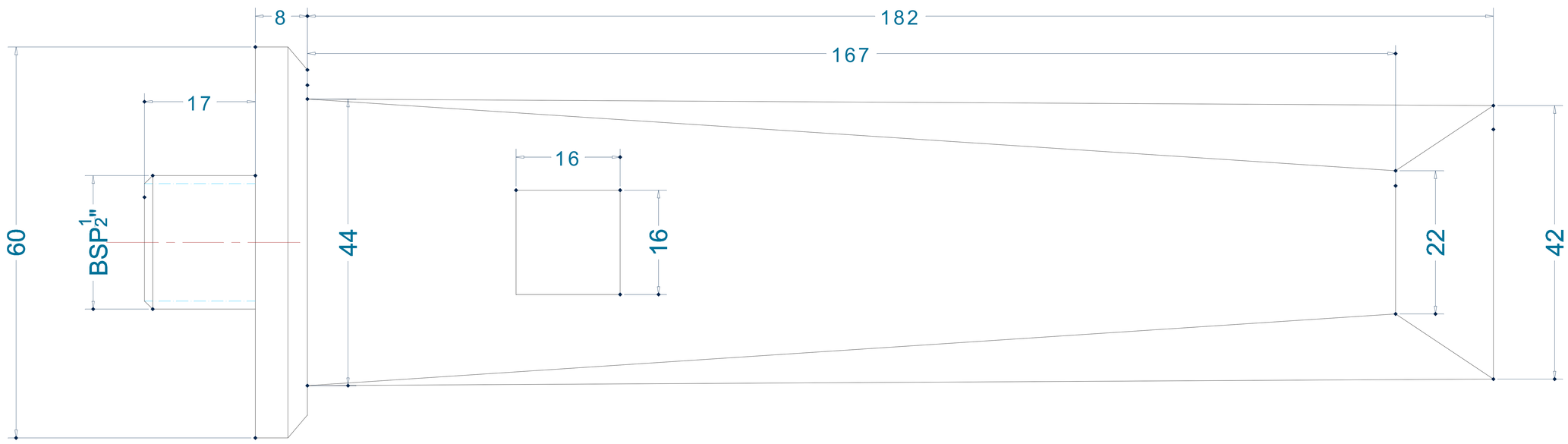

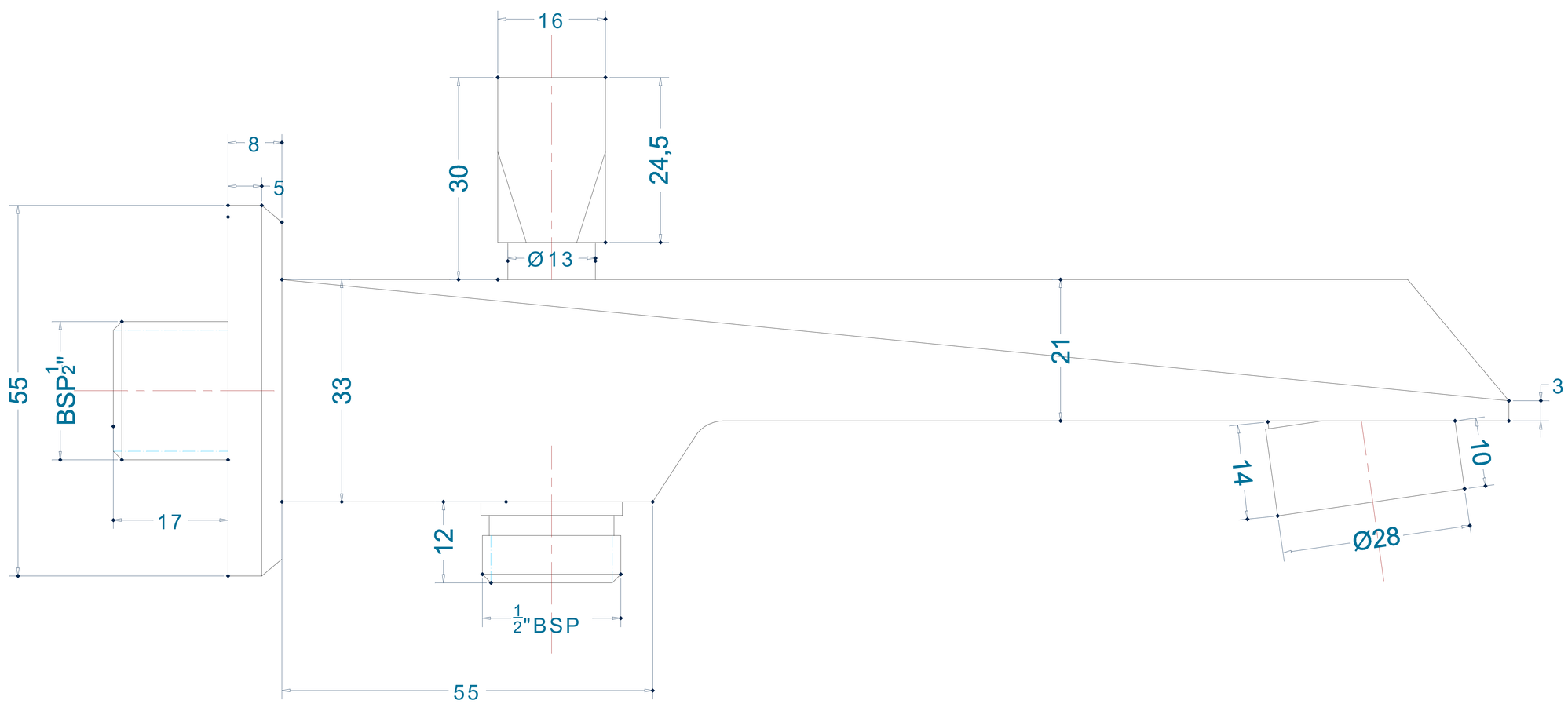

OROS-F350008
BATH SPOUT WITH TIP TON

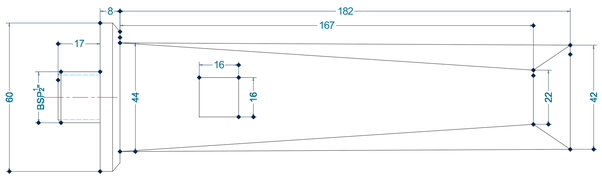

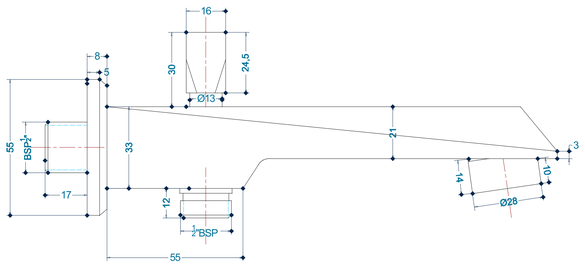

OROS-F350008
BATH SPOUT WITH TIP TON