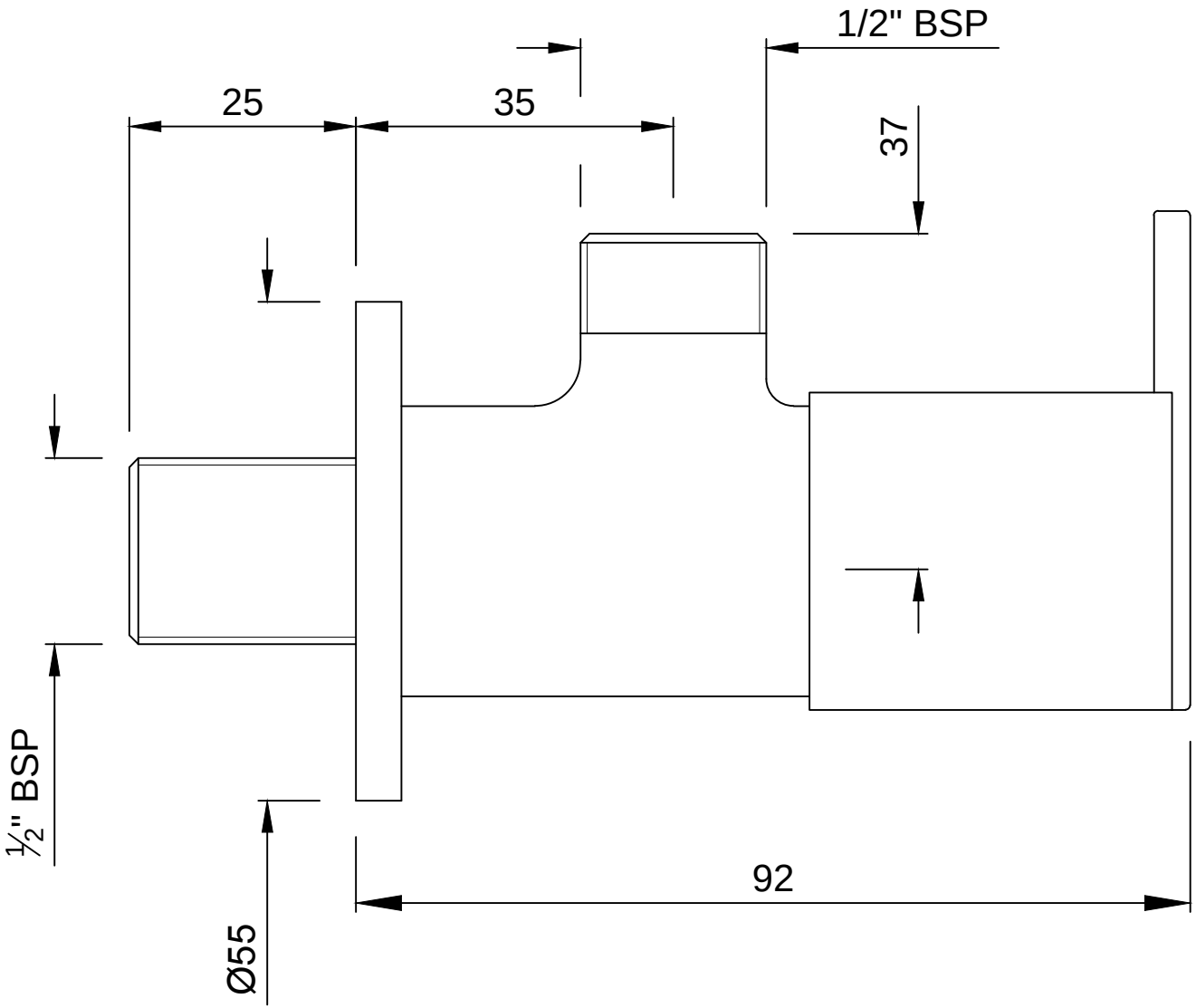| Angle Valve | Cat. No.-FON-40053 |
|---|---|