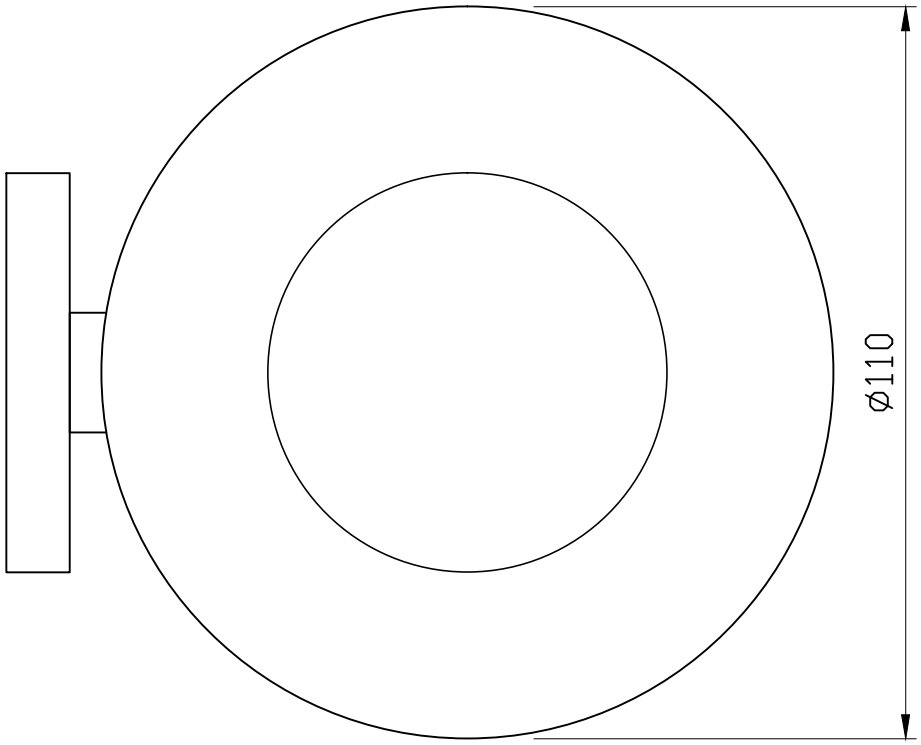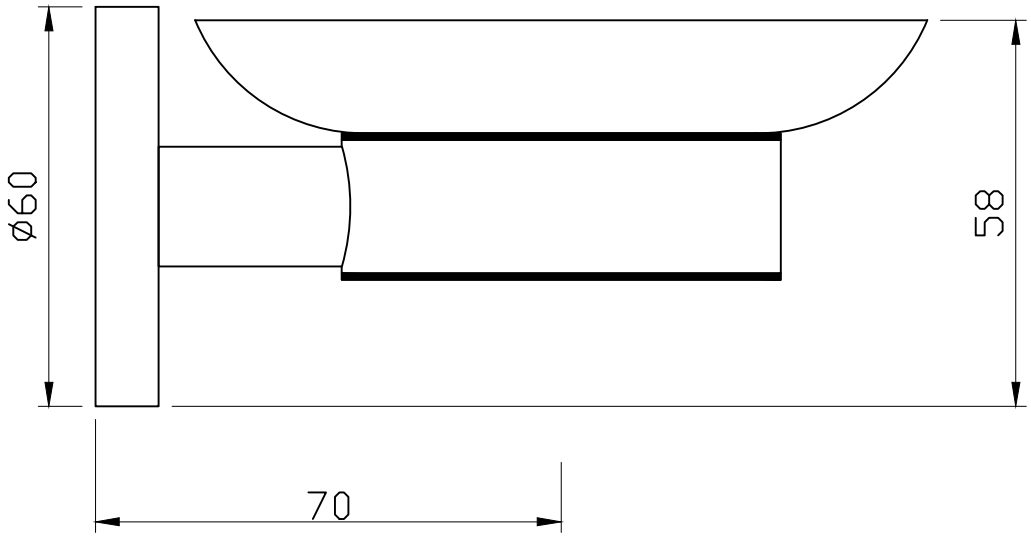Soap Dish Holder	CAT.NO. 1131N